TLD1211SJ_EVAL_S00.SchDoc

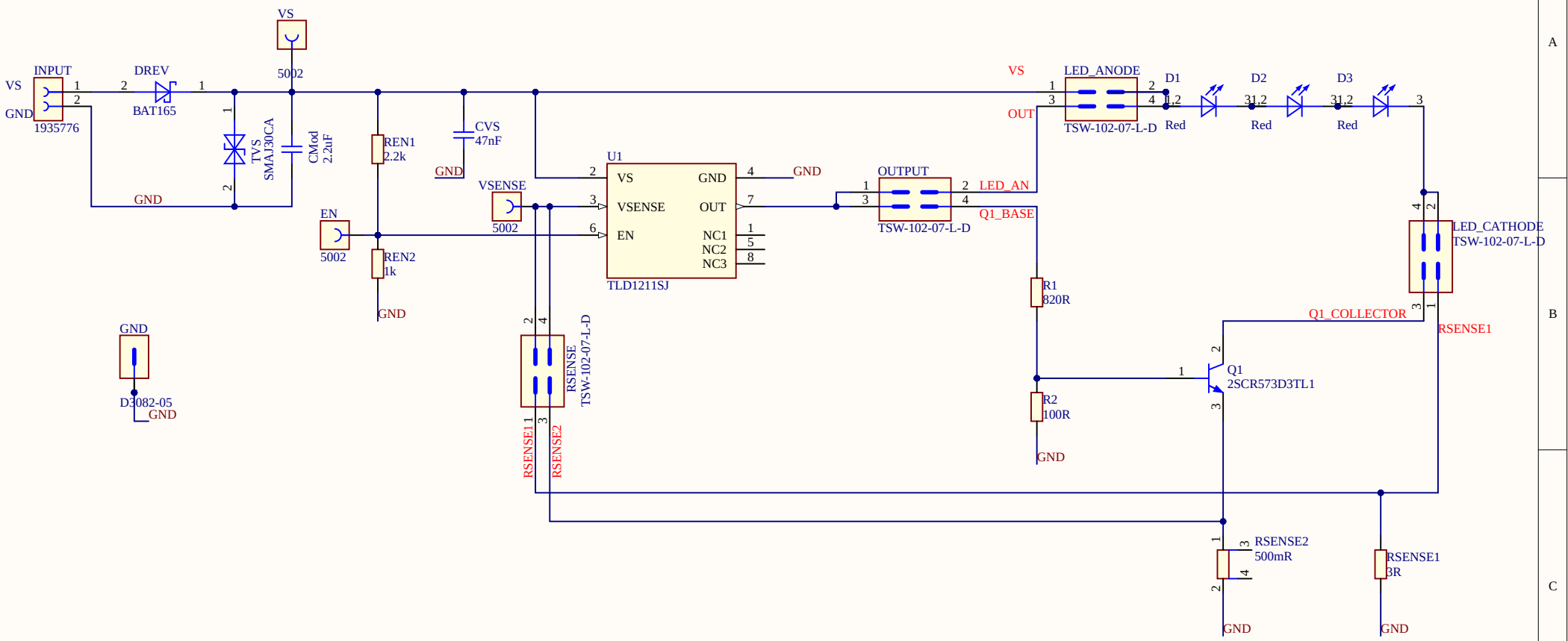

REL
Confidential

Infineon Technologies AG
IFAT DC ATV BP ASE SEV
Siemensstraße 2, 9500 Villach

Title	TLD1211SJ_EVAL		
Variant	Default_Assembly	Approved	<Appr.>
Size: A4	Document Name: TLD1211SJ_EVAL_S00.SchDoc	Rel.: REL	Rev.: V1.0

Author: Makantasi Vasiliki
Date: 23/7/2020 Time: 7:49:11 PM SVN Revision: Not in version control

© Infineon Technologies AG 2018. All Rights Reserved.